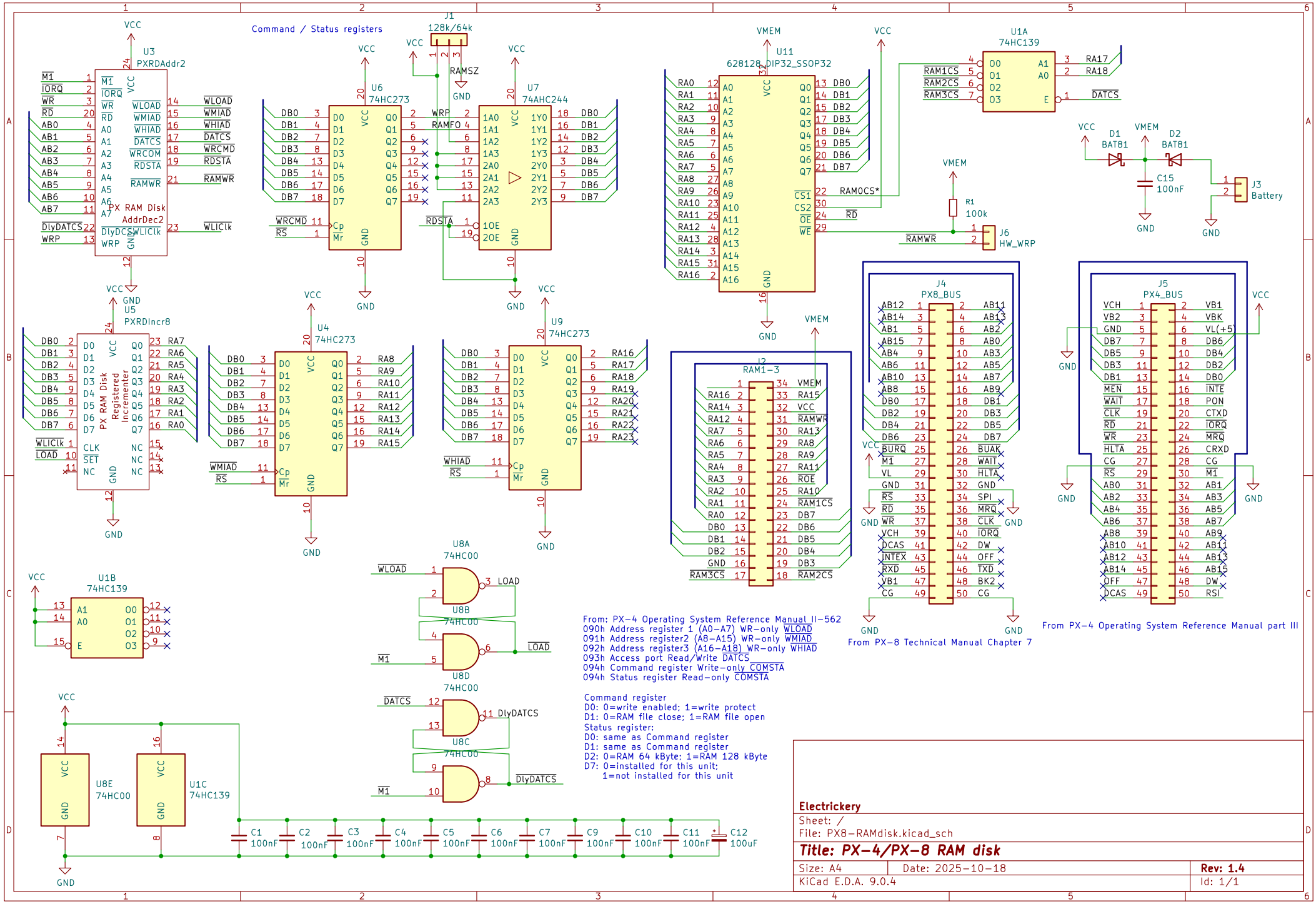
Command / Status registers
U3 PXRDAddr2
PX RAM Disk AddrDec2
U5 PXRDIncr8
PX RAM Disk Registered Incrementer
U6 74HC273
U7 74AHC244
U4 74HC273
U9 74HC273
J1 128k/64k
RAMSZ
U11 628128 DIP32_SSOP32
U1A 74HC139
U1B 74HC139
U8A 74HC00
U8B 74HC00
U8D 74HC00
U8C 74HC00
U8E 74HC00
U1C 74HC139
J2 RAM1-3
J4 PX8_BUS
J5 PX4_BUS
D1 BAT81
D2 BAT81
C15 100nF
J3 Battery
R1 100k
J6 HW_WRP
From: PX-4 Operating System Reference Manual II-562
090h Address register 1 (A0-A7) WR-only WLOAD
091h Address register2 (A8-A15) WR-only WMIAD
092h Address register3 (A16-A18) WR-only WHIAD
093h Access port Read/Write DATCS
094h Command register Write-only COMSTA
094h Status register Read-only COMSTA
Command register
D0: 0=write enabled; 1=write protect
D1: 0=RAM file close; 1=RAM file open
Status register:
D0: same as Command register
D1: same as Command register
D2: 0=RAM 64 kByte; 1=RAM 128 kByte
D7: 0=installed for this unit;
1=not installed for this unit
From PX-8 Technical Manual Chapter 7
From PX-4 Operating System Reference Manual part III
C1 100nF
C2 100nF
C3 100nF
C4 100nF
C5 100nF
C6 100nF
C7 100nF
C9 100nF
C10 100nF
C11 100nF
C12 100uF
Electrickery
Sheet: /
File: PX8-RAMdisk.kicad_sch
Title: PX-4/PX-8 RAM disk
Size: A4
Date: 2025-10-18
Rev: 1.4
KiCad E.D.A. 9.0.4
Id: 1/1