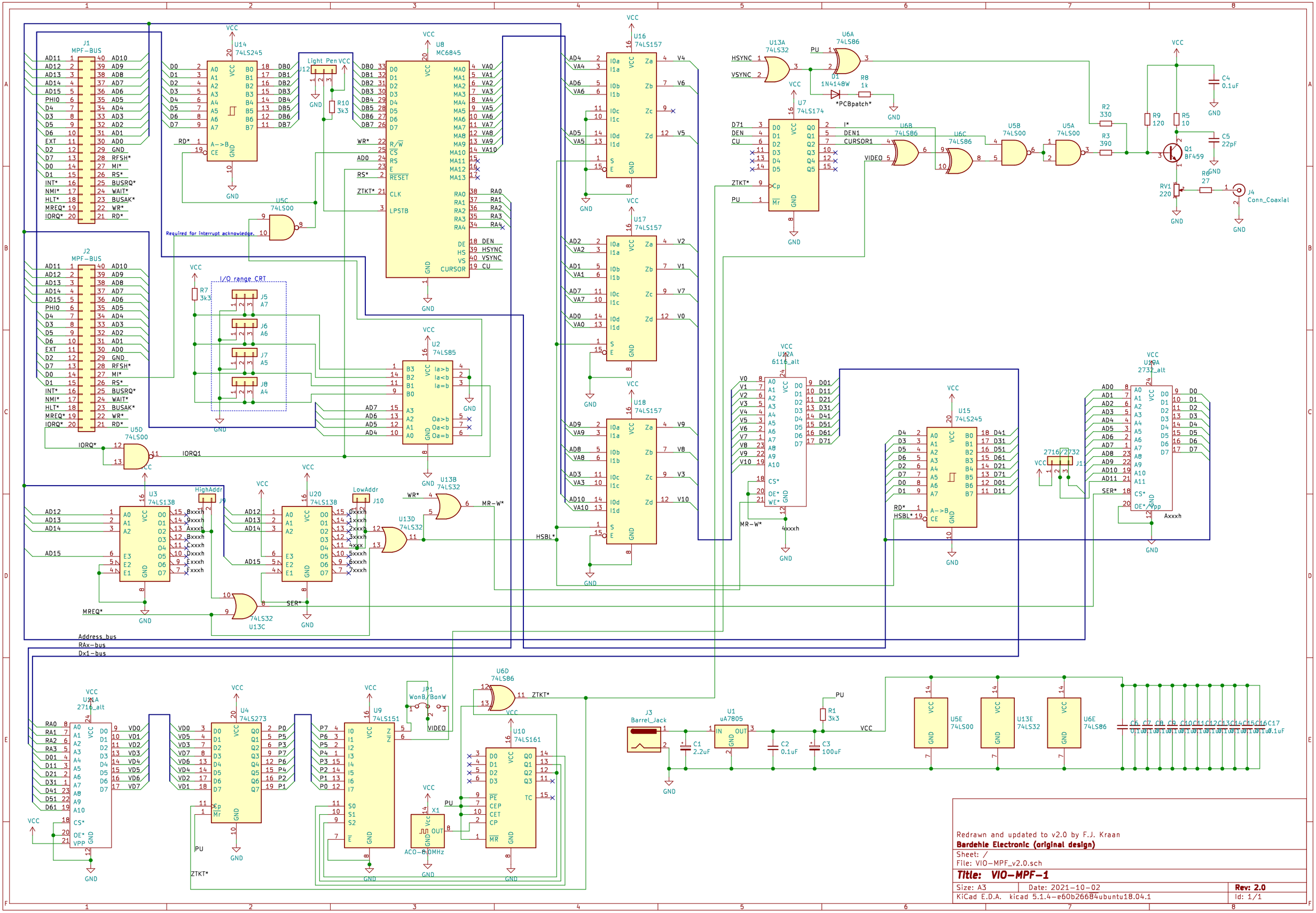

J1 MPF-BUS
J2 MPF-BUS
U14 74LS245
U8 MC6845
U16 74LS157
U17 74LS157
U18 74LS157
U13A 74LS32
U6A 74LS86
U7 74LS174
U6B 74LS86
U6C 74LS86
U5B 74LS00
U5A 74LS00
U5C 74LS00
U5D 74LS00
U2 74LS85
U3 74LS138
U20 74LS138
U13B 74LS32
U13D 74LS32
U13C 74LS32
U12A 6116_alt
U15 74LS245
U19A 2732_alt
U11A 2716_alt
U4 74LS273
U9 74LS151
U10 74LS161
U6D 74LS86
U5E 74LS00
U13E 74LS32
U6E 74LS86
J3 Barrel_Jack
U1 uA7805
Q1 BF459
J4 Conn_Coaxial
Light Pen
I/O range CRT
Required for interrupt acknowledge.
Address bus
RAx-bus
Dx1-bus
Redrawn and updated to v2.0 by F.J. Kraan
Bardehle Electronic (original design)
Sheet: /
File: VIO-MPF_v2.0.sch
Title: VIO-MPF-1
Size: A3
Date: 2021-10-02
Rev: 2.0
KiCad E.D.A. kicad 5.1.4-e60b26684ubuntu18.04.1
Id: 1/1